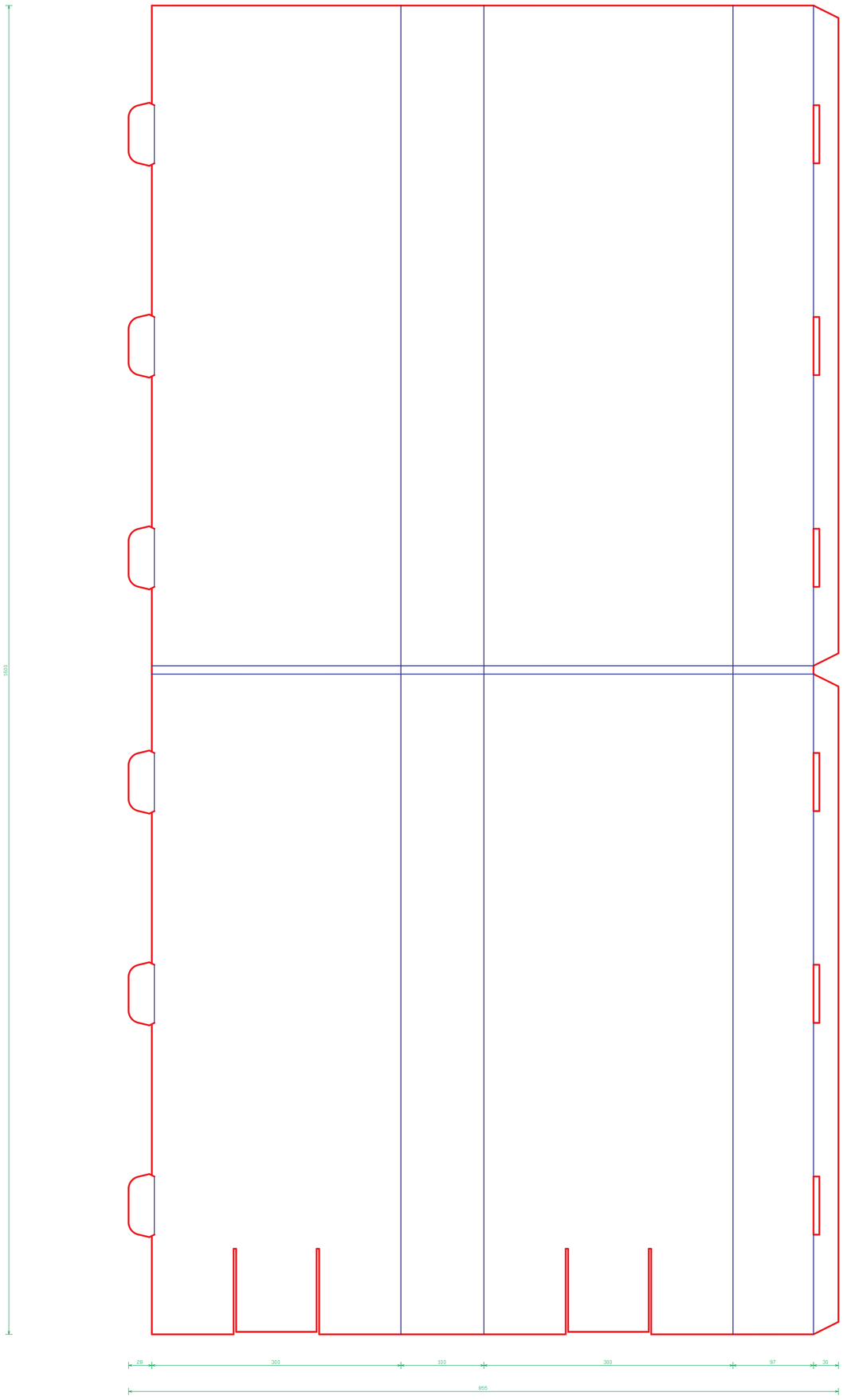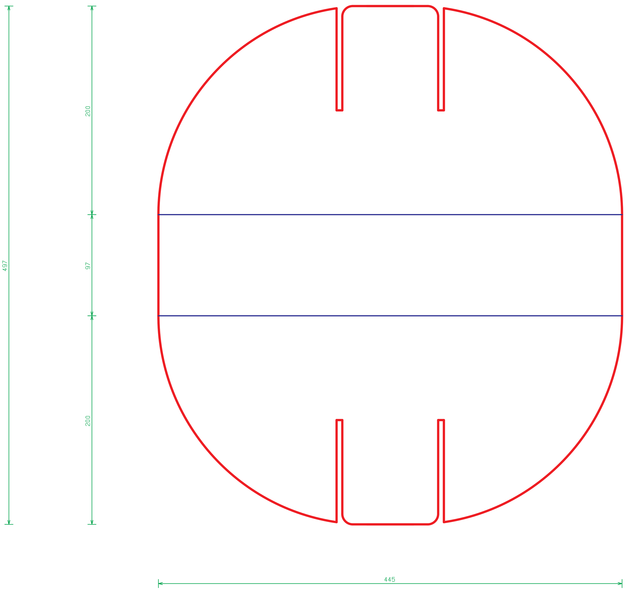300x100x1600